NOTES (REF):
1.0 WEIGHT ESTIMATE:
1.1 COVER/SLAB: 12,100 LB
<PARA > 1.2 BASE W/ FILTERS: 43,000 LB
2.0 MATERIALS MEET OR EXCEEDS REQUIREMENTS:
2.1 VAULT:
2.1.1 REINFORCEMENT STEEL: REBAR, ASTM A-615 GRADE 60
2.1.2 CEMENT: ASTM C-150 SPECIFICATIONS
CONCRETE 28 DAY COMPRESSIVE STRENGTH SHALL BE 5000 PSI (MIN)
2.2 ACCESS MANHOLES: ASTM-A-48, CLASS 35B GRAY IRON
OR ASTM A536, GRADE 80-55-06 DUCTILE IRON.
3.0 CONCRETE STRUCTURE DESIGN LOADINGS:
3.1 AASHTO HS-20 LOAD RATING.
3.2 SOIL WEIGHT = 120 PCF
3.3 DEPTH OF OVERBURDEN: <8-FT
3.4 EQUIVALENT FLUID PRESSURE = 40 PCF
3.5 LATERAL LIVE LOAD SURCHARGE PER SPECS.
4.0 PERFORMANCE CHARACTERISTICS (W/ FABCO STANDARD CARTRIDGE):
4.1 MAXIMUM CARTRIDGE CAPACITY = 12
4.2 MAXIMUM TREATMENT CAPACITY = 3.0 CFS (1,380 GPM)
4.3 BYPASS CAPACITY 14.0 CFS (6,300 GPM)
5.0 EAST JORDAN IRON WORKS (EJIW) UTILITY CONSTRUCTION CASTINGS ARE RATED FOR REPEATED VEHICULAR TRAFFIC AND CONFORM TO AASHTO M306 STANDARDS. FINAL MANHOLE OR ACCESS HATCH INSTALLATION, AND ADJUSTMENT TO GRADE, SHALL BE PERFORMED BY QUALIFIED PERSONNEL.
6.0 OFF-LOADING, SETTING, EXCAVATION, DEWATERING, DRAINAGE, AND BACK FILL OPERATIONS SHALL BE PERFORMED IN ACCORDANCE WITH OSHA AND LOCAL REGULATIONS AND ARE THE RESPONSIBILITY OF THE CONTRACTOR. SUB-BASE AND BACKFILL DEPTH ARE SITE SPECIFIC AND SHALL BE SPECIFIED BY THE ENGINEER OF RECORD.
7.0 THE CONTRACTOR SHALL VERIFY THAT THE UNIT IS VERTICALLY AND HORIZONTALLY PLUMB AND STABLE, WITH MINIMUM VOIDS AND MINIMUM UN-COMPACTED SOIL AFTER BACK FILL OPERATION.
8.0 CONNECT AND SEAL DRAIN LINES TO THE STORMSAFE INLET AND OUTLET PORTS AND IF NECESSARY GROUT WITH APPROVED NON-SHRINKING GROUT-FILL IN ACCORDANCE WITH GROUT MANUFACTURERS INSTRUCTIONS. ALL GROUT-FILL MATERIALS SHALL BE SUPPLIED BY THE CONTRACTOR. THE STORMSAFE "INLET" AND "OUTLET" PORTS ARE CLEARLY LABELED WITH BLACK PAINT. INLET AND OUTLET DRAIN LINES ARE TO BE ALIGNED FLUSH WITH RESPECT TO THE INTERIOR VAULT WALLS.
9.0 MAINTENANCE AND CARTRIDGE FILTER REPLACEMENT INSTRUCTIONS ARE PROVIDED SEPARATELY BY FABCO AND ARE TYPICALLY SITE SPECIFIC.
10.0 CARTRIDGE FILTER REPLACEMENT (IN GENERAL):
FOR BEST PERFORMANCE REPLACE CARTRIDGE FILTERS IAW FABCO RECOMMENDATIONS. HIGH CONTAMINANT LOCATIONS MAY REQUIRE MORE FREQUENT CARTRIDGE REPLACEMENT. REMOVE ANY DEBRIS OR HEAVY SEDIMENT FROM THE INFLUENT AND EFFLUENT CHAMBERS. ENTER THE STORMSAFE CARTRIDGE CHAMBER IN ACCORDANCE WITH STATE AND LOCAL REGULATIONS FOR ENCLOSED SPACE ENTRY. REMOVE EACH CARTRIDGE BY ROTATING 30-DEG IN THE CLOCKWISE DIRECTION AND LIFTING. LIKEWISE, INSTALL THE NEW CARTRIDGE AND LOCK IN PLACE BY ROTATING 30-DEGREES IN THE COUNTER CLOCKWISE DIRECTION. DISPOSE OF USED FILTER CARTRIDGES PER LOCAL REGULATIONS.

THIS DRAWING IS FOR REFERENCE ONLY. SITE-SPECIFIC DATA MAY REQUIRE VAULT CONFIGURATION CHANGES.

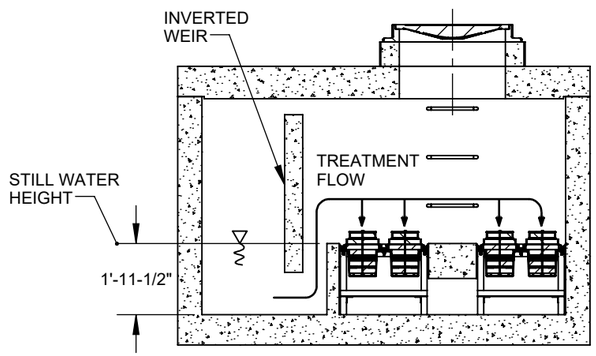

SECTION B-B

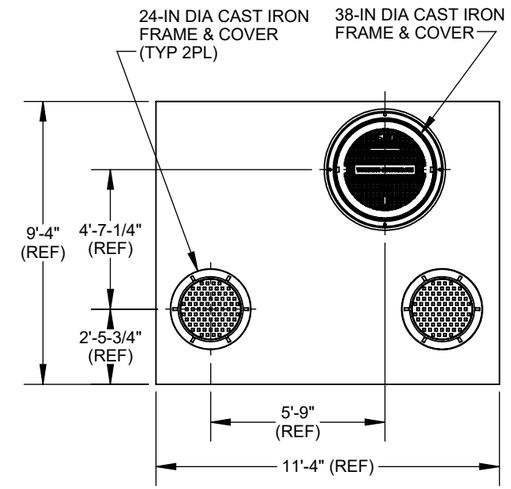

PLAIN VIEW

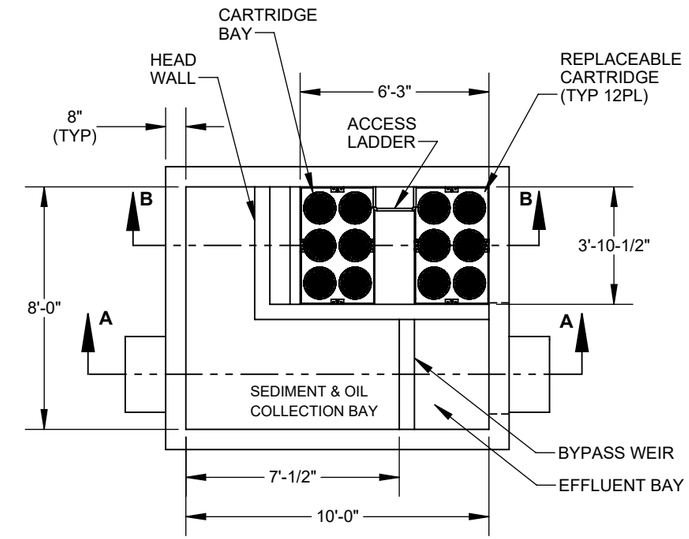

PLAIN VIEW
(SLAB NOT SHOWN)

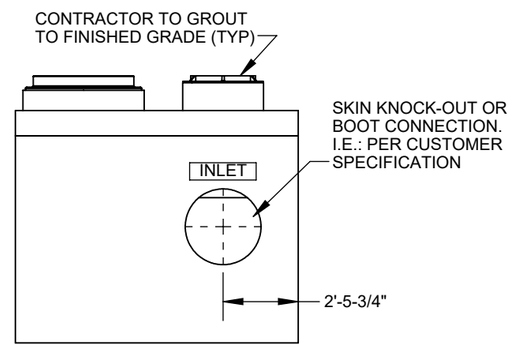

INLET VIEW

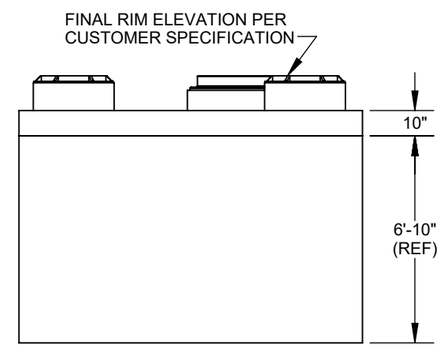

FRONT VIEW

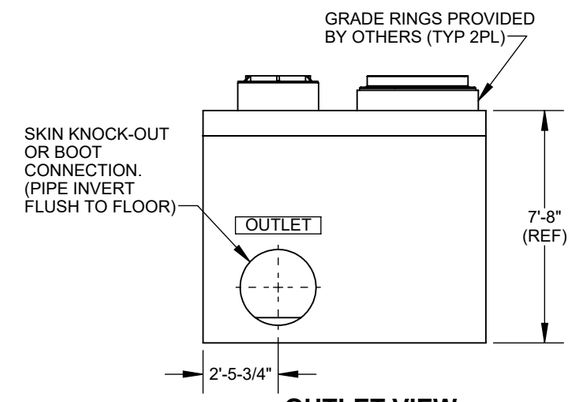

OUTLET VIEW

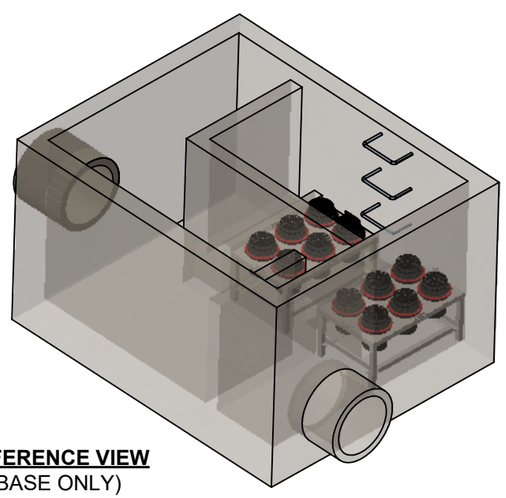

REFERENCE VIEW
(BASE ONLY)

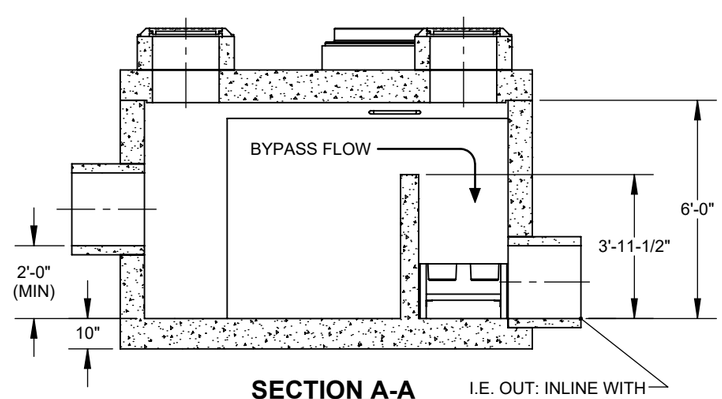

SECTION A-A

RIM ELEVATION (FT)			
PIPE	I.E. (FT)	MATERIAL	SIZE (IN)
INLET			
OUTLET			

PROPRIETARY AND CONFIDENTIAL
THIS DOCUMENT IS THE PROPERTY OF FABCO INDUSTRIES AND IS CONVEYED WITH THE EXPRESS CONDITION THAT IT AND THE INFORMATION CONTAINED IN IT ARE NOT TO BE USED, DISCLOSED, OR REPRODUCED IN WHOLE OR IN PART, FOR ANY PURPOSE WITHOUT THE EXPRESS WRITTEN CONSENT OF FABCO INDUSTRIES, AND THAT NO RIGHT IS GRANTED TO DISCLOSE OR SO USE ANY INFORMATION CONTAINED IN SAID DOCUMENT.

UNLESS OTHERWISE SPECIFIED
REMOVE ALL BURRS
BREAK SHARP EDGES .002 - .020
FILLETS .020 MAX
DIMENSIONS ARE IN INCHES AND INCLUDE CHEMICALLY APPLIED OR PLATED FINISHES

TOLERANCES:
DEC .00 ± .01
DEC .000 ± .005
FRACT ± 1/16
ANGLE ± 2°

	APPROVAL	DATE
DWN	H.G.	3/1/2024
CHKR		
ENGR	J.P.	3/1/2024
UPD	H.G.	1/27/2025

PROJECT

MATERIAL
SEE NOTES

FABCO INDUSTRIES, INC.
24 CENTRAL DRIVE
FARMINGDALE, NY 11735
WWW.FABCO-INDUSTRIES.COM

STORMSAFE, 12 CARTRIDGE

SIZE	DWG. NO.	REV
B	SSV12-1-000	C

SCALE: NONE SHEET 1 OF 1